55.04 EXTERNAL AMENITY

31/03/2025
VC267

55.04-1 Daylight to existing windows objective

24/09/2026
VC315

To allow adequate daylight into existing habitable room windows.

Standard B4-1

New buildings opposite an existing habitable room window provide for a light court to the existing window that has a minimum area of 3 square metres and minimum dimension of 1 metre clear to the sky. The calculation of the area may include land on the abutting lot.

New walls or carports more than 3 metres in height opposite an existing habitable room window are set back from the window at least 50 per cent of the height of the new wall if the wall is within a 55 degree arc from the centre of the existing window. The arc may be swung to within 35 degrees of the plane of the wall containing the existing window.

Where the existing window is above ground floor level, the wall height is measured from the floor level of the room containing the window.

Diagram B4-1 Daylight to existing windows

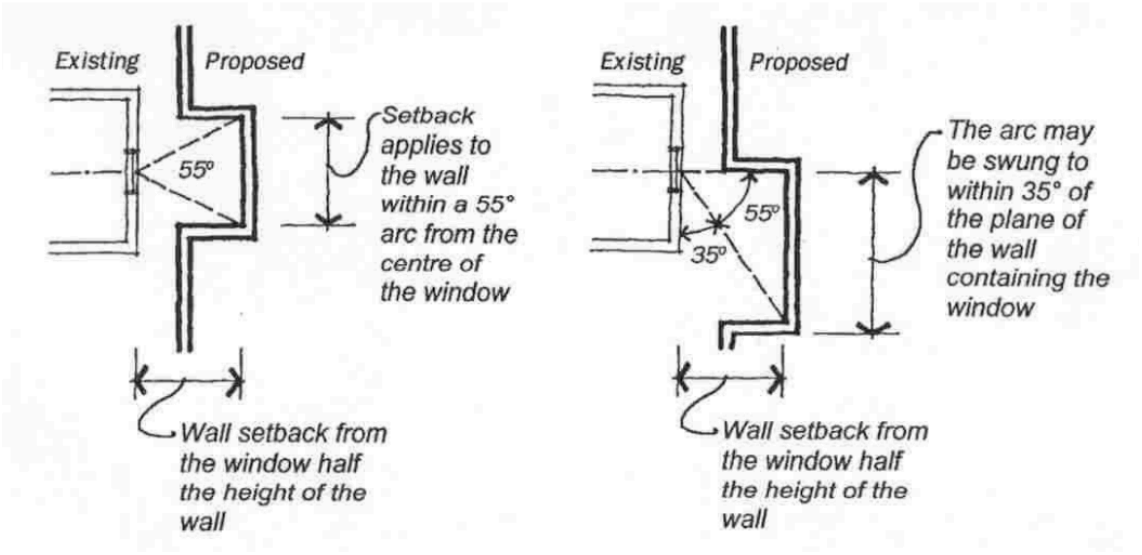

Decision guidelines

Before deciding on an application, the responsible authority must consider:

- The design response.
- The extent to which the existing dwelling or small second dwelling has provided for reasonable daylight access to its habitable rooms through the siting and orientation of its habitable room windows.
- The impact on the amenity of existing dwellings or small second dwellings.

55.04-2 Existing north-facing windows objective

02/04/2025
VC276

To allow adequate solar access to existing north-facing habitable room windows.

Standard B4-2

Where a north-facing habitable room window of a neighbouring dwelling or small second dwelling is within 3 metres of a boundary on an abutting lot:

- A new building is to be set back from the boundary by at least 1 metre, plus 0.6 metres for every metre of height over 3.6 metres up to 6.9 metres, plus 1 metre for every metre of height over 6.9 metres. This setback is to be provided for a distance of at least 3 metres from the edge of each side of the window.
- For new buildings that meet the Standard B2-3.2 setback, the building is set back from the boundary by at least 6 metres up to a height not exceeding 11 metres and at least 9 metres for a height over 11 metres between south 30 degrees west to south 30 degrees east. This setback is to be provided for a distance of at least 3 metres from the edge of each side of the window.

For this standard a north-facing window is a window with an axis perpendicular to its surface oriented from north 20 degrees west to north 30 degrees east.

Diagram B4-2.1 North-facing windows

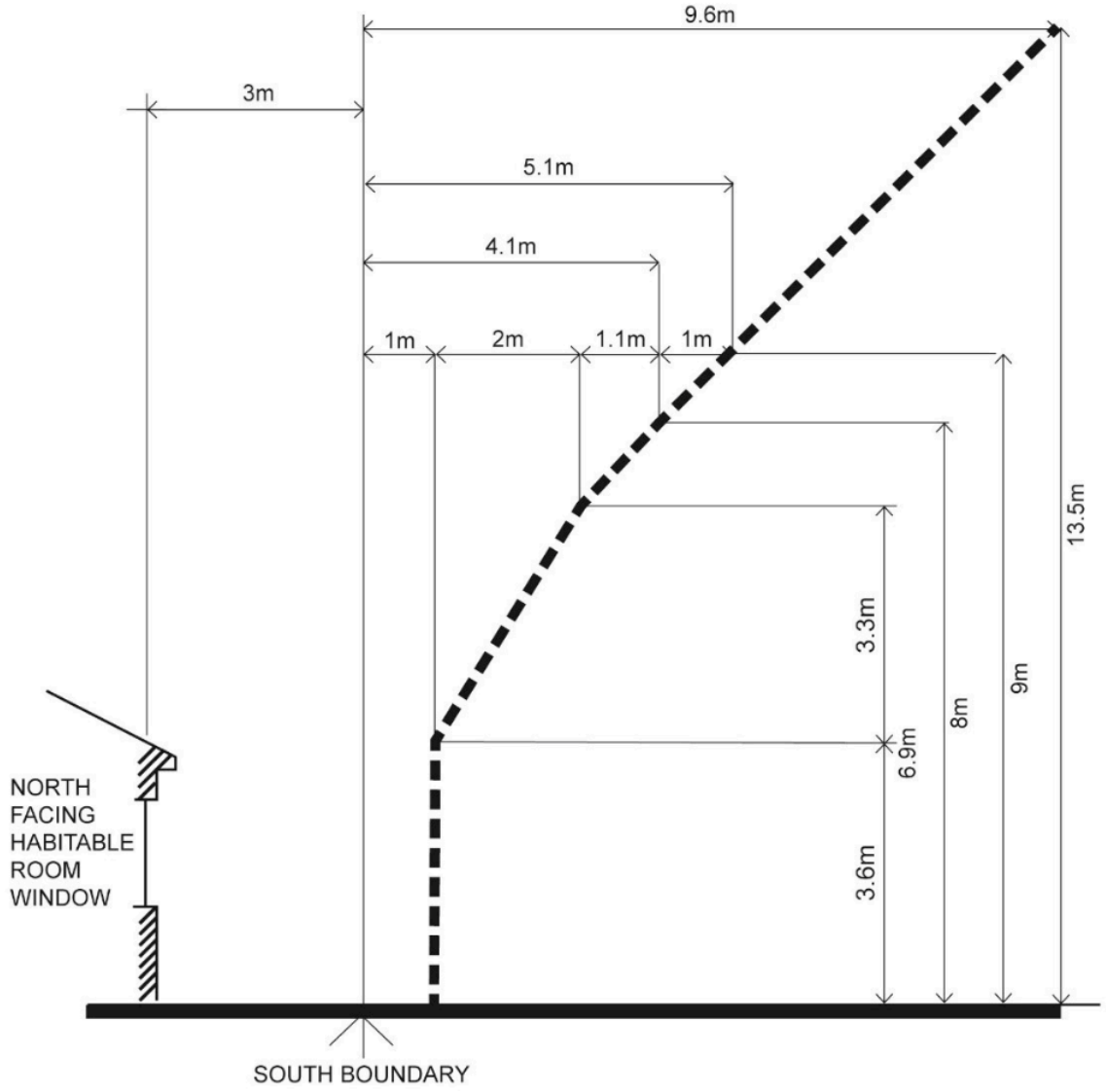

Diagram B4-2.2 North-facing windows

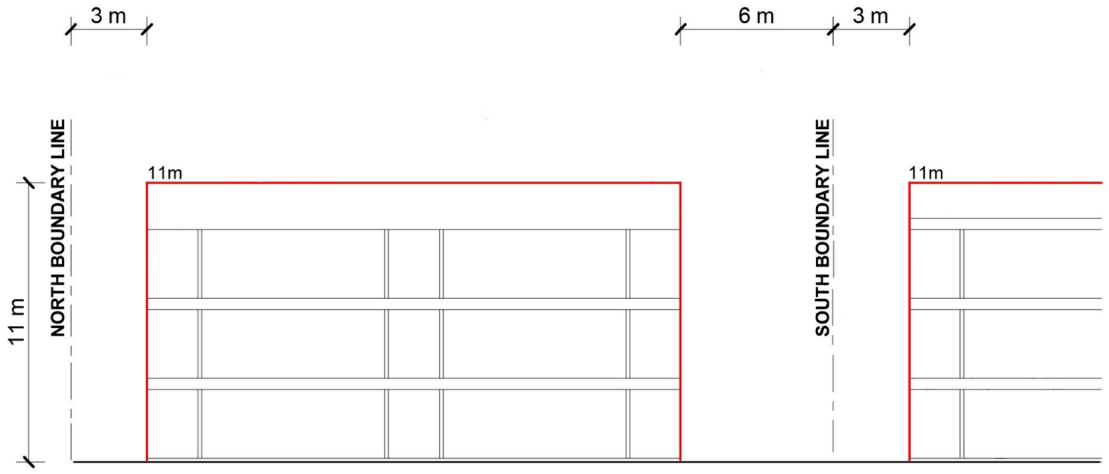

Decision guidelines

Before deciding on an application, the responsible authority must consider:

- The design response.
- Existing sunlight to the north-facing habitable room window of the existing dwelling or small second dwelling.
- The impact on the amenity of existing dwellings or small second dwellings.

55.04-3 Overshadowing secluded open space objective

02/04/2025
VC276

To ensure buildings do not significantly overshadow existing secluded private open space.

Standard B4-3

The area of secluded private open space that is not overshadowed by the new development is greater than 50 per cent, or 25 square metres with a minimum dimension of 3 metres, whichever is the lesser area, for a minimum of five hours between 9 am and 3 pm on 22 September.

If existing sunlight to the secluded private open space of an existing dwelling or small second dwelling is less than the requirements of this standard, the amount of sunlight will not be further reduced.

Decision guidelines

Before deciding on an application, the responsible authority must consider:

- The design response.
- The impact on the amenity of existing dwellings or small second dwellings.
- Existing sunlight penetration to the secluded private open space of the existing dwelling or small second dwelling.
- The time of day that sunlight will be available to the secluded private open space of the existing dwelling or small second dwelling.
- The effect of a reduction in sunlight on the existing use of the existing secluded private open space.

55.04-4 Overlooking objective

31/03/2025
VC267

To limit views into existing secluded private open space and habitable room windows.

Standard B4-4

In Clause 55.04-4 a habitable room does not include a bedroom.

A habitable room window, balcony, podium, terrace, deck or patio is located and designed to avoid direct views into the secluded private open space of an existing dwelling or small second dwelling within a horizontal distance of 9 metres (measured at ground level) of the window, balcony, terrace, deck or patio. Views are measured within a 45 degree angle from the plane of the window or perimeter of the balcony, terrace, deck or patio, and from a height of 1.7 metres above floor level.

A habitable room window, balcony, terrace, deck or patio that is located with a direct view into a habitable room window of an existing dwelling or small second dwelling within a horizontal distance of 9 metres (measured at ground level) of the window, balcony, terrace, deck or patio:

- Is offset a minimum of 1.5 metres from the edge of one window to the edge of the other; or
- Has sill heights of at least 1.7 metres above floor level; or
- Has fixed, obscure glazing in any part of the window below 1.7 metre above floor level; or
- Has permanently fixed external screens to at least 1.7 metres above floor level and be no more than 25 per cent transparent; or
- Has fixed elements that prevent the direct view, such as horizontal ledges or vertical fins.

Obscure glazing in any part of the window below 1.7 metres above floor level may be openable provided that there are no direct views as specified in this standard.

Screens used to obscure a view are:

- Perforated panels or trellis with a maximum of 25 per cent openings or solid translucent panels.
- Permanent, fixed and durable.
- Designed and coloured to blend in with the development.

This standard does not apply to a new habitable room window, balcony, terrace, deck or patio which faces a property boundary where there is a visual barrier at least 1.8 metres high and the floor level of the habitable room, balcony, terrace, deck or patio is less than 0.8 metres above ground level at the boundary.

Diagram B 4-4 Overlooking

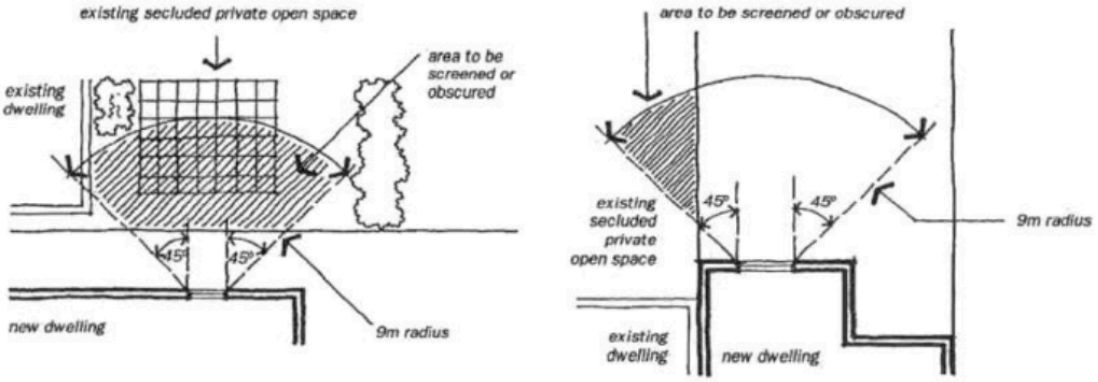

Decision guidelines

Before deciding on an application, the responsible authority must consider:

- The design response.
- The impact on the amenity of the secluded private open space or habitable room window.

- The existing extent of overlooking into the secluded private open space and habitable room windows of existing dwellings or small second dwellings.
- The internal daylight to and amenity of the proposed dwelling, residential building or small second dwelling.

55.04-5
31/03/2025
VC267

Internal views objective

To limit views into the secluded private open space and habitable room windows of dwellings and residential buildings within a development.

Standard B4-5

In Clause 55.04-5 a habitable room does not include a bedroom.

Within the development, a habitable room window, balcony, terrace, deck or patio that is located with a direct view into the secluded private open space of another dwelling:

- Is offset a minimum of 1.5 metres from the edge of the secluded private open space; or
- Has a sill height of at least 1.7 metres above floor level; or
- Has a fixed, visually obscure balustrade to at least 1.7 metre above floor level; or
- Has permanently fixed external screens to at least 1.7 metres above floor level; or.
- Has fixed elements that prevent the direct view, such as horizontal ledges or vertical fins.

Direct views are measured at a height of 1.7 metres above floor level and within:

- A 45 degree horizontal angle from the edge of the new window or balcony.
- A 45 degree angle in the downward direction.

Screens provided for overlooking are no more than 25 per cent transparent. Screens may be openable provided that this does not allow direct views as specified in this standard.

Decision guideline

Before deciding on an application, the responsible authority must consider the design response.